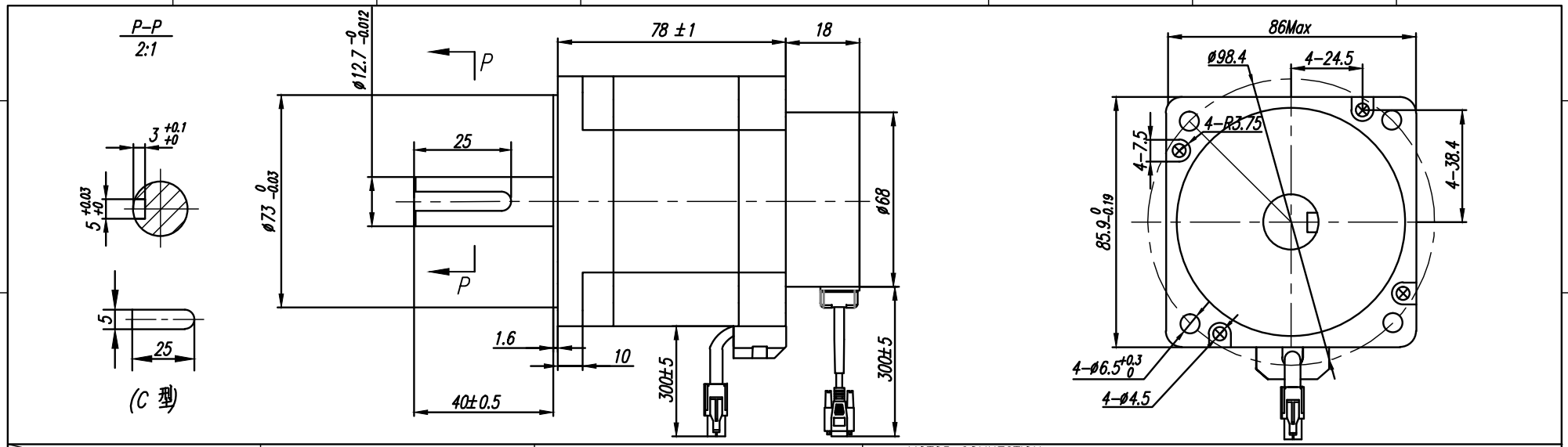

CONNECTION / SPECIFICATION		BIPOLAR PARALLEL		
PHASE		2	PHASE	
STEP ANGLE	*	1.8	° /STEP	
SUPPLY VOLTAGE(VDC)		5.0	V	
AMPS/PHASE	*	2.0	A/PHASE	
RESISTANCE	*	2.5	±10%Ω/PHASE	
INDUCTANCE		20	±10%mH/PHASE	
HOLDING TORQUE (Nm)		420	N.cm	Min
DETENT TORQUE (Nm)		6.5	N.cm	Max
WEIGHT (Kg)				

Output Wave form

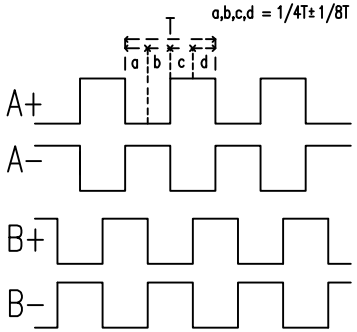

MOTOR CONNECTION

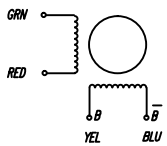

MOTOR AMP1-172167-9	
PIN NO.1	A+
PIN NO.2	A-
PIN NO.3	B+
PIN NO.4	B-

ENCODER CONNECTION

ENCODER DB15 1000P/R	
PIN NO.1	A+
PIN NO.2	VCC+5V
PIN NO.3	GND
PIN NO.11	B+
PIN NO.12	B-
PIN NO.13	A-

ENCODER OPERATING TEMP: -20~+80°
AMBIENT TEMPERATURE -10°~40° (HIGHER TEMPERATURE REDUCES DUTY CYCLE)
INSULATION RESISTANCE 100 Mohm (UNDER NORMAL TEMPERATURE AND HUMIDITY)
INSULATION CLASS B 130°
DIELECTRIC STRENGTH 500VAC FOR 1 MIN. (BETWEEN THE MOTOR COILS AND THE MOTOR CASE)
AMBIENT HUMIDITY MAX.85% (NO CONDENSATION)

HSM23442H

Specification

AMT LLC