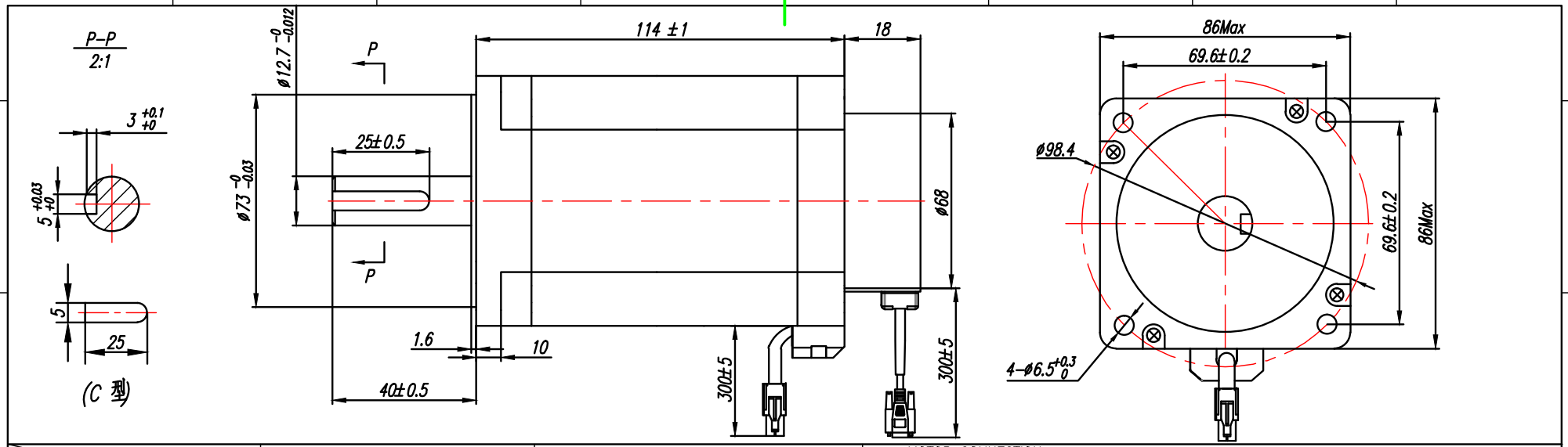

CONNECTION / SPECIFICATION	BIPOLAR PARALLEL		
PHASE	2	PHASE	
STEP ANGLE	1.8	° /STEP	
SUPPLY VOLTAGE(VDC)	5.6	V	
AMPS/PHASE	2.8	A/PHASE	
RESISTANCE	2.0	±10%Ω/PHASE	
INDUCTANCE	20	±10%mH/PHASE	
HOLDING TORQUE (Nm)	870	N.cm	Min
DETENT TORQUE (Nm)	27	N.cm	Max
WEIGHT (Kg)			

Output Wave form

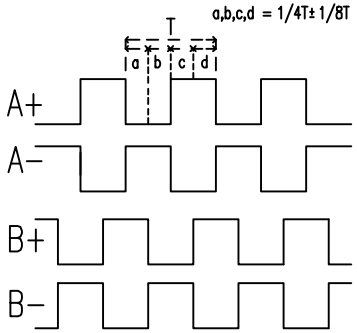

MOTOR CONNECTION

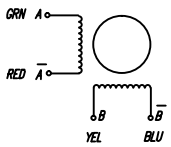

MOTOR AMP1−172167−9	
PIN NO.1	A+
PIN NO.2	A−
PIN NO.3	B+
PIN NO.4	B−

ENCODER CONNECTION

ENCODER DB15 1000P/R	
PIN NO.1	A+
PIN NO.2	VCC+5V
PIN NO.3	GND
PIN NO.11	B+
PIN NO.12	B−
PIN NO.13	A−

ENCODER OPERATING TEMP: −20~+80°
AMBIENT TEMPERATURE −10°~40° (HIGHER TEMPERATURE REDUCES DUTY CYCLE)
INSULATION RESISTANCE 100 Mohm (UNDER NORMAL TEMPERATURE AND HUMIDITY)
INSULATION CLASS B 130°
DIELECTRIC STRENGTH 500VAC FOR 1 MIN. (BETWEEN THE MOTOR COILS AND THE MOTOR CASE)
AMBIENT HUMIDITY MAX.85% (NO CONDENSATION)

HSM23487H

Specification

AMT LLC